IS341/SIS334 BPM

LAB 08: MAPPING BETWEEN **BPMN** TO **BPEL**

Mapping BPMN to BPEL

1. Component Folding
2. Getways and mapping rules

Mapping BPMN to BPEL

COMPONENT FOLDING

Component Folding

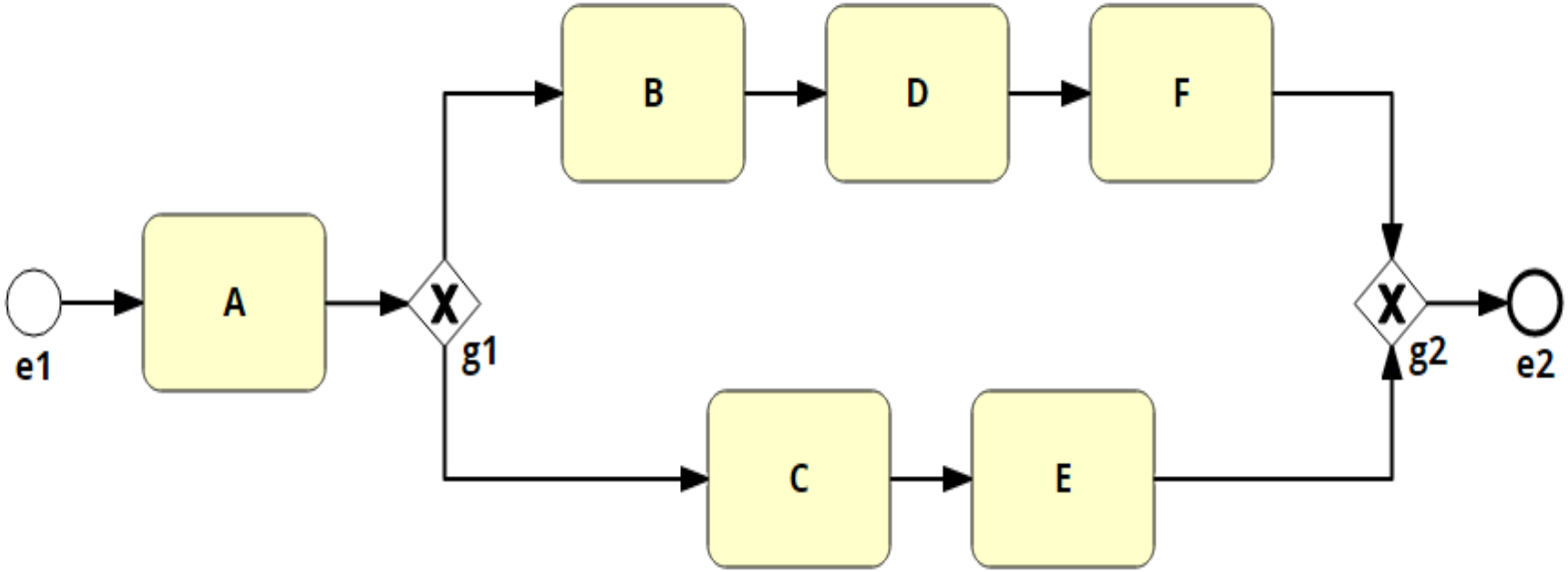

Component Folding

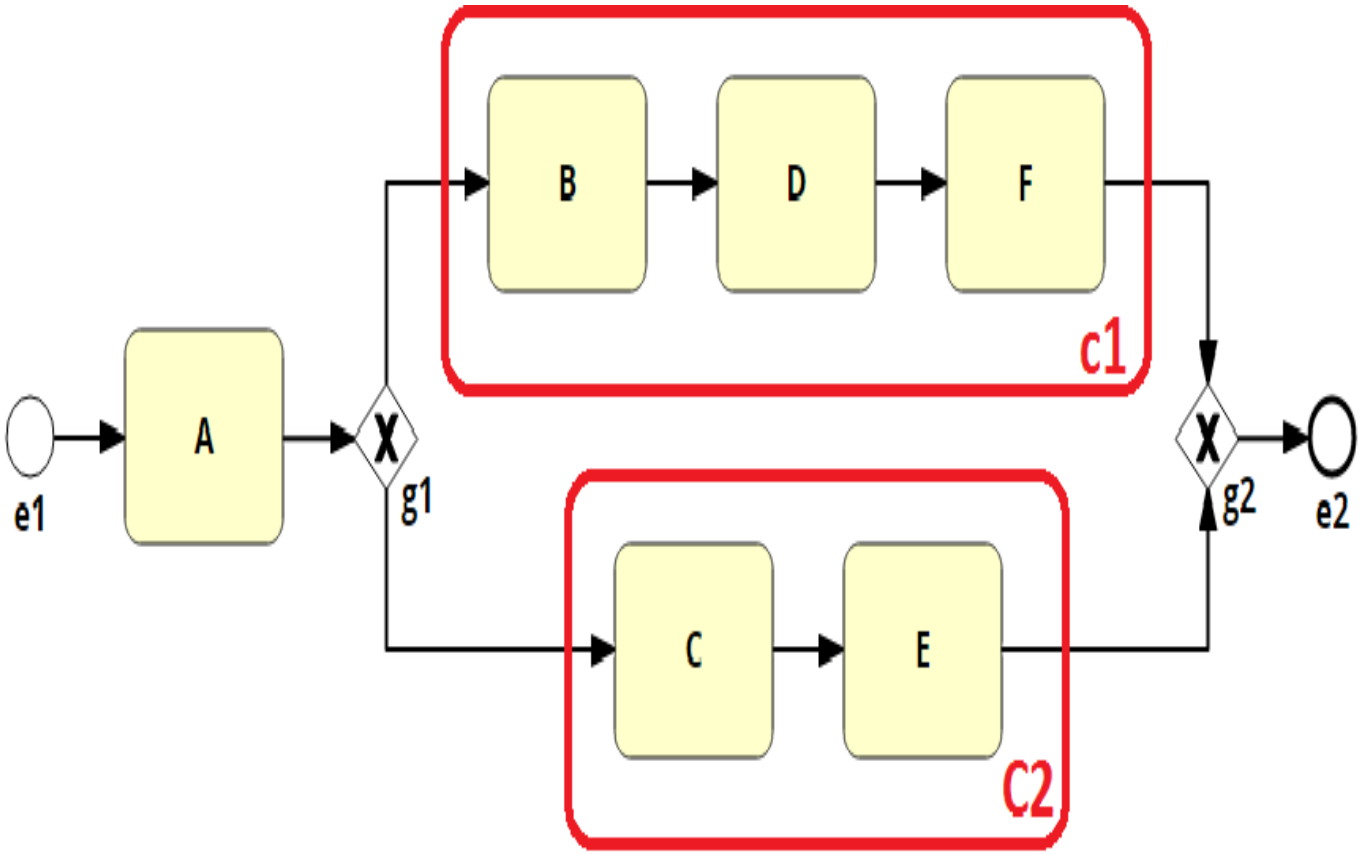

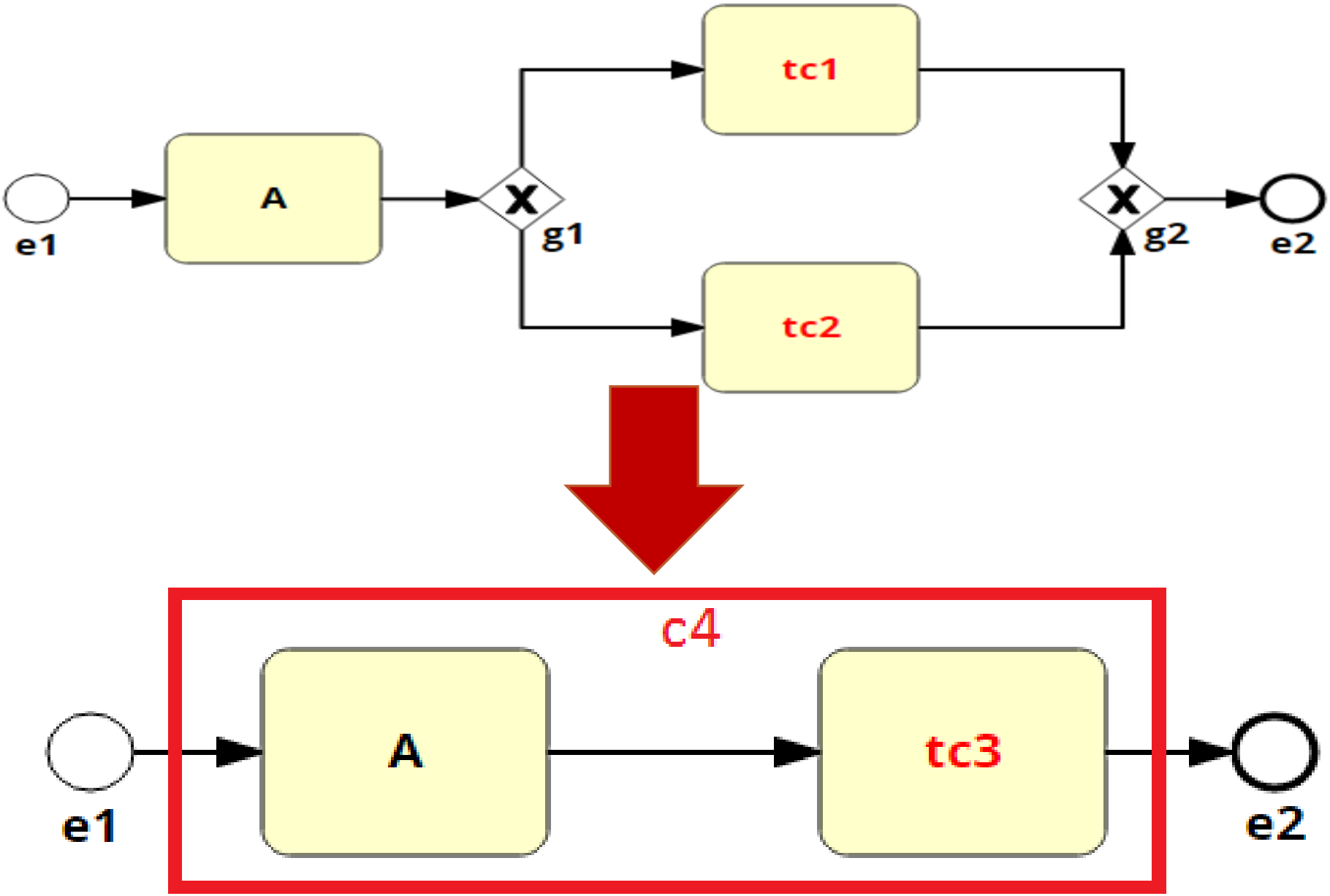
tc1
A
X
g1
X
g2
e1
e2
tc2
c4
A
tc3
e1
e2

Mapping BPMN to BPEL

GETWAYS AND MAPPING RULES

Sequence Pattern

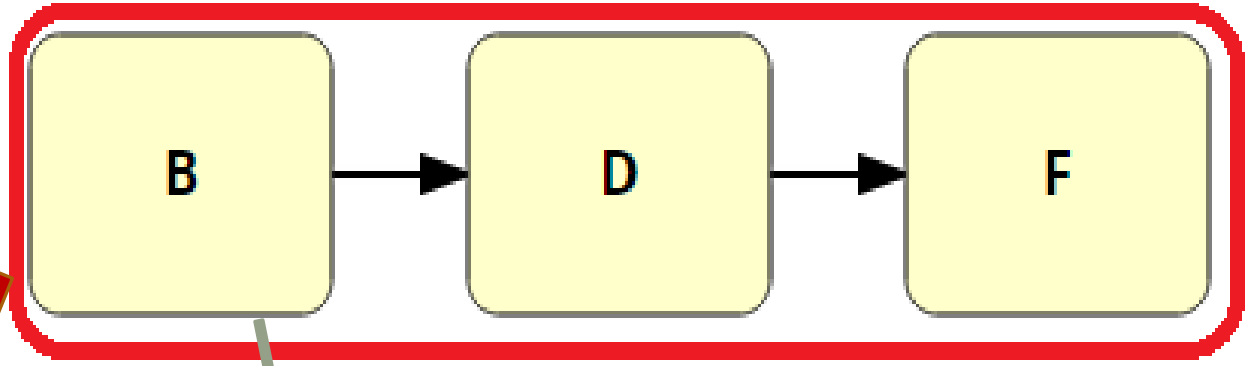


```
<sequence>
        <invoke name="B" />
        <invoke name="D" />
        <invoke name="F" />
</ sequence >
```

Sequence Pattern – Receive Event

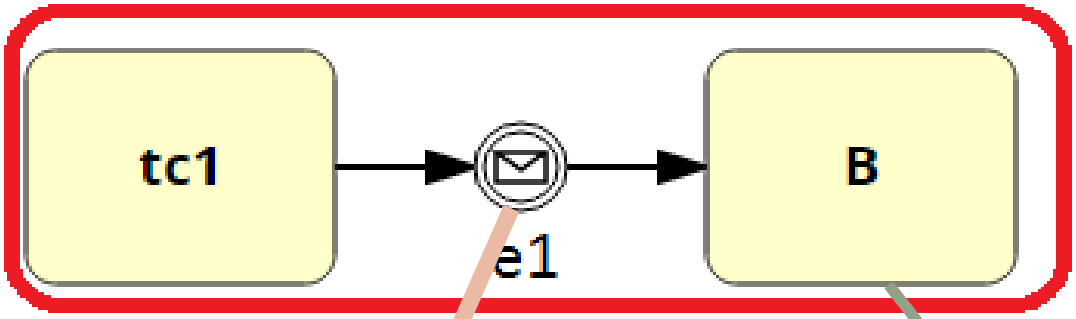


```
<sequence>
        Mapping tc1
        <receive name="e1" />
        <invoke name="B">
</ sequence >
```

Flow Pattern

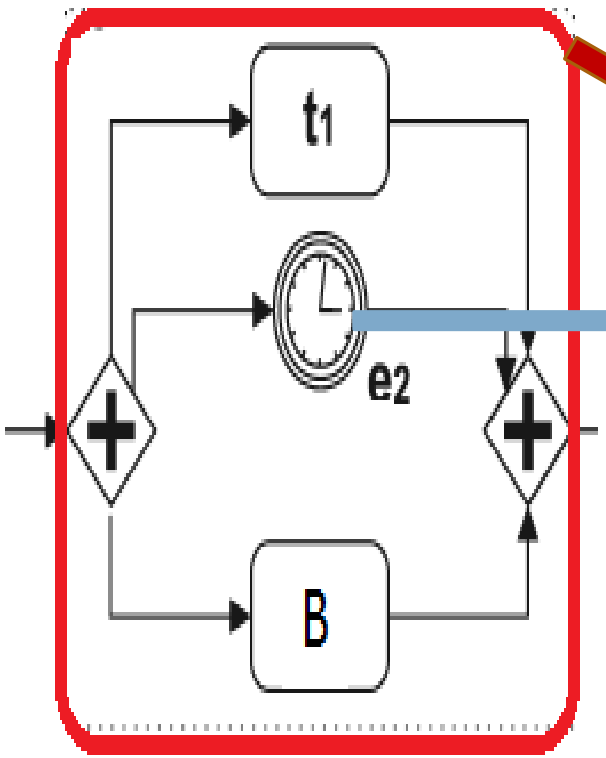

<flow>

Mapping t1

<**wait** name="e2"/>

<**invoke** name="B" />

</flow>

Switch Pattern

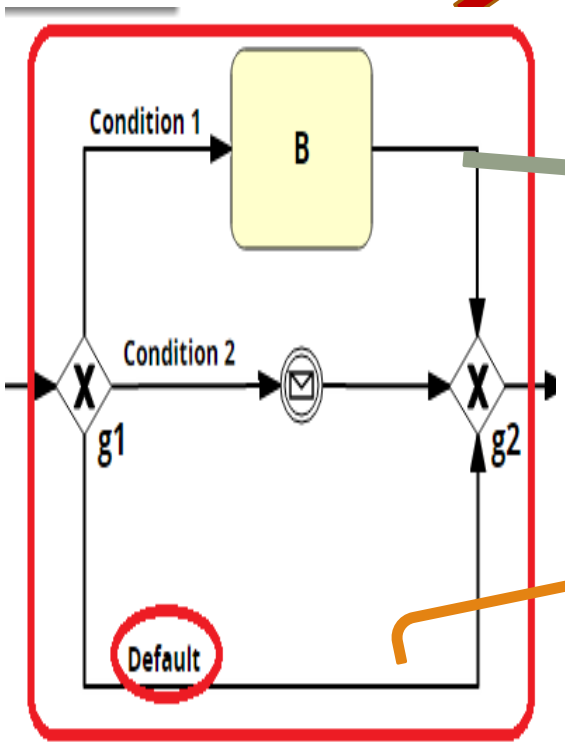


```
<switch>
  <case condition ="condition1">
    <invoke name="B" />
  </case>
  <case condition="condition2">
    <receive name="e2" />
  </case>
  <otherwise>
    <empty>
  </otherwise>
</switch>
```

Pick Pattern

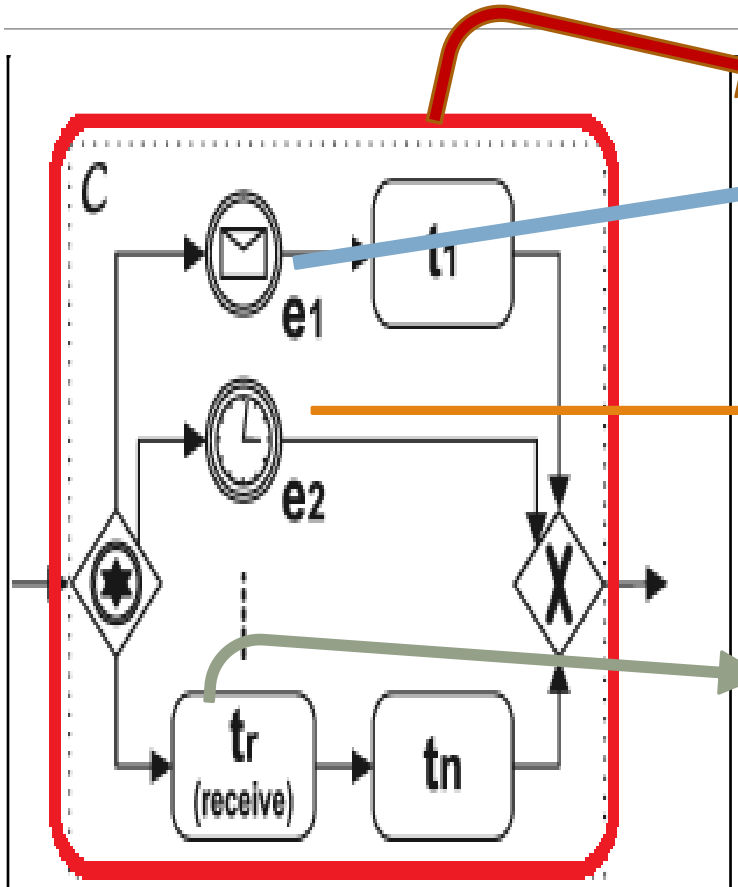


```
<pick>
  <onMessage name="e1">
      Mapping t1
  </onMessage>
  <onAlarm name="e2">
      <empty>
  </onAlarm>
...........
< onMessage name ="tr">
      Mapping tn
</ onMessage>
</pick>
```

While Pattern

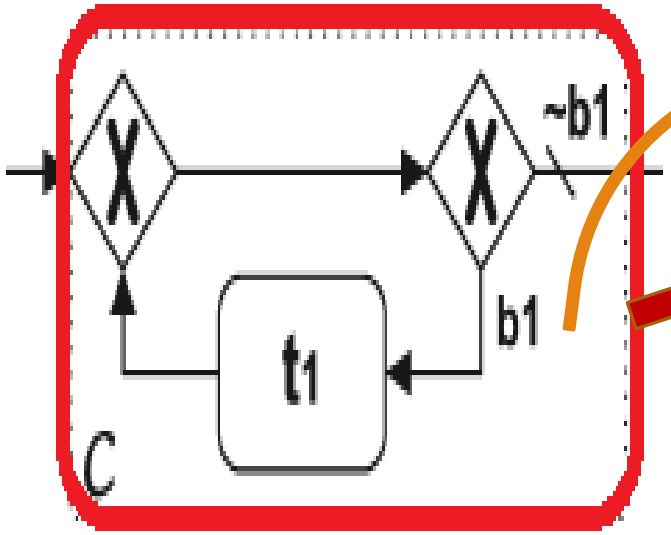

<while condition="b1">

Mapping t1

</while>

Repeat using While Pattern

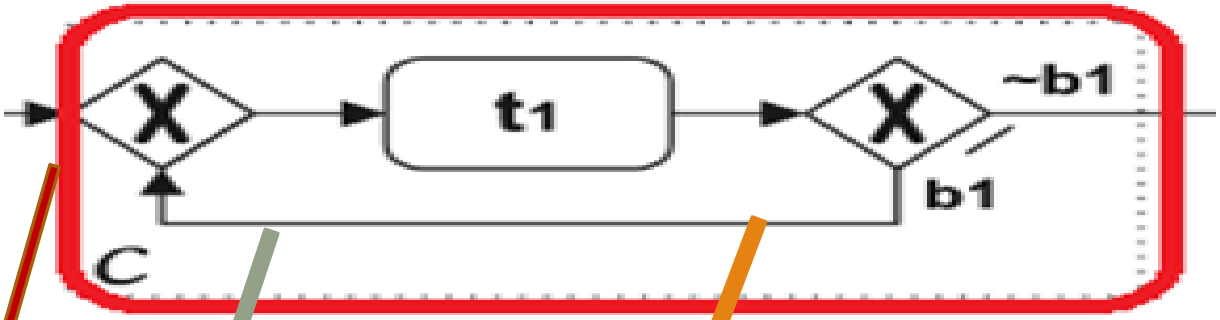


```
<sequence>
        Mapping t1
      <while condition="b1">
              Mapping t1
       </while>
</sequence>
```

Repeat using While Pattern

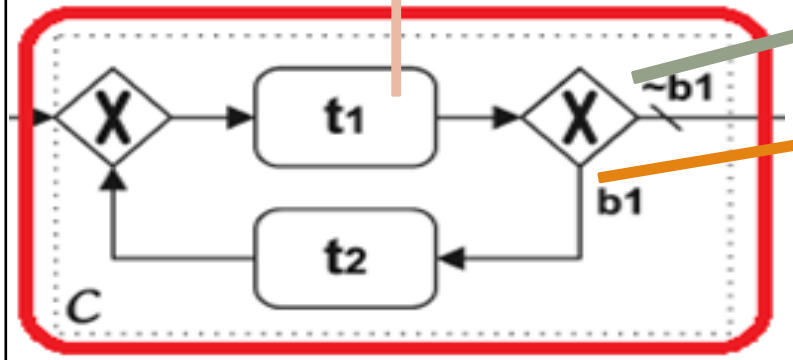


```
<sequence>
    Mapping t1
    <while  condition="b1">
        <sequence>
            Mapping t2
            Mapping t1
        </sequence>
    </while>
</sequence>
```

BPMN to BPEL - Example 1

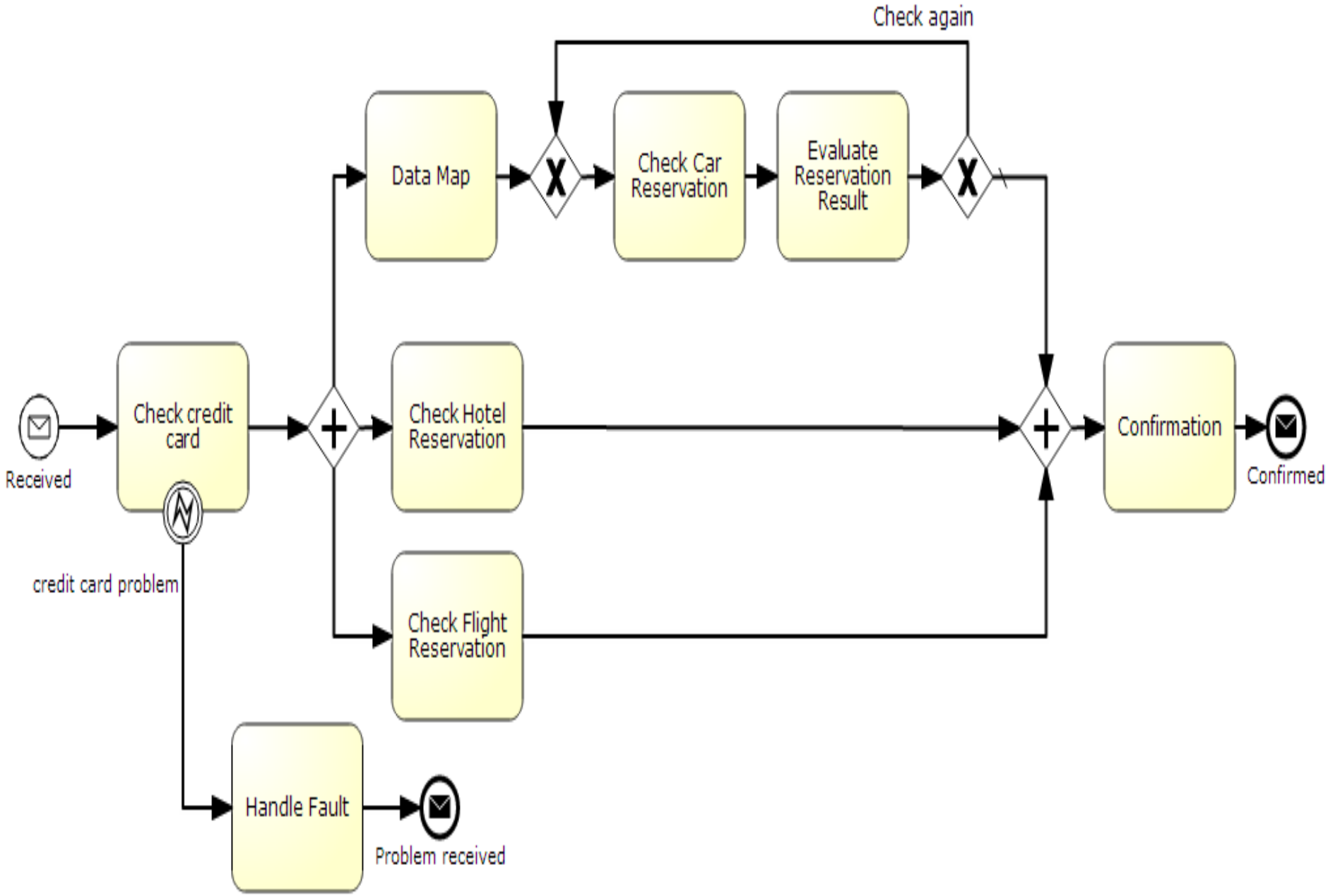
Check again
Data Map
Check Car Reservation
Evaluate Reservation Result
Received
Check credit card
Check Hotel Reservation
Confirmation
Confirmed
credit card problem
Check Flight Reservation
Handle Fault
Problem received

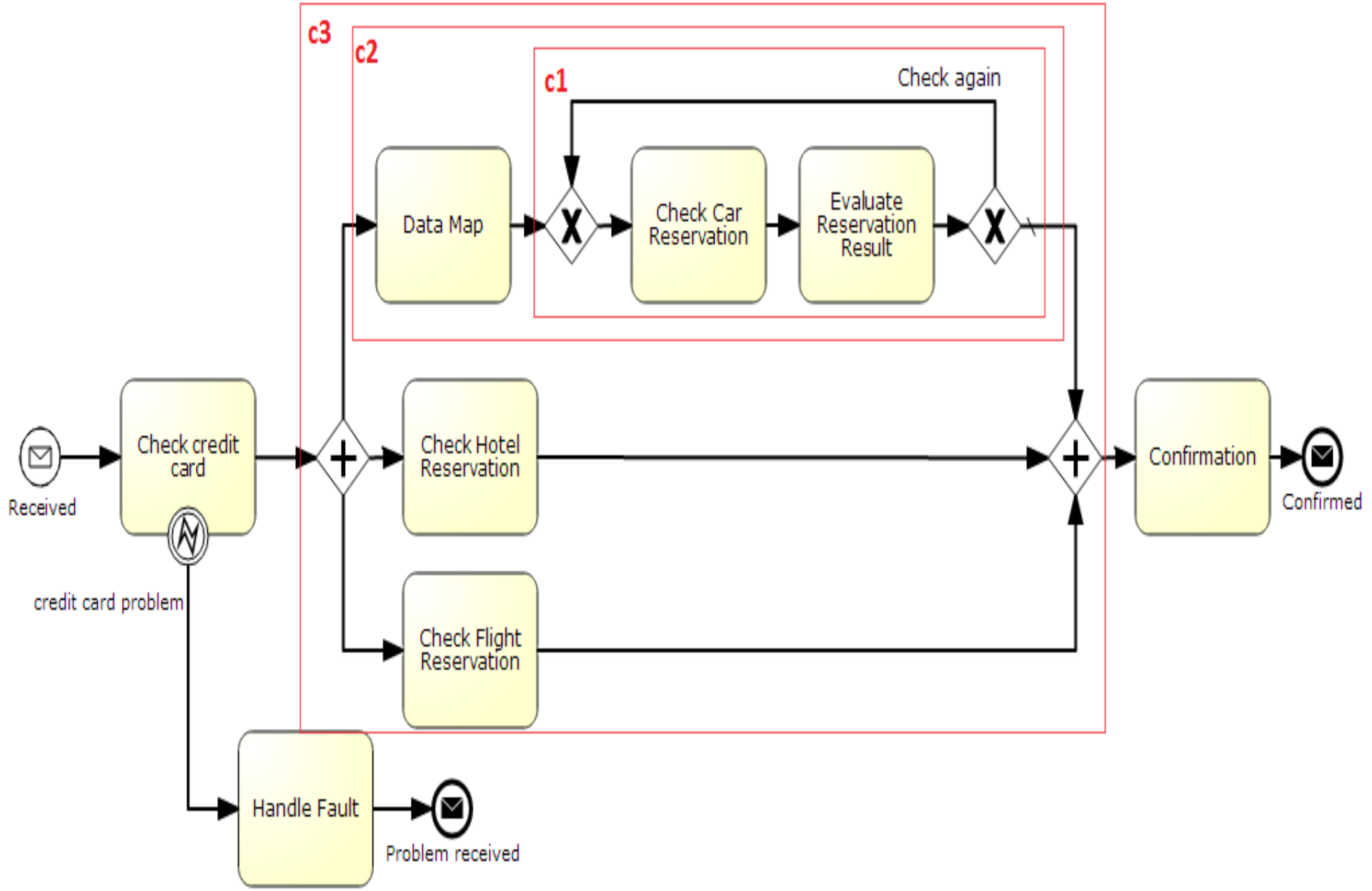
c3
c2
c1
Check again
Data Map
Check Car Reservation
Evaluate Reservation Result
Received
Check credit card
credit card problem
Check Hotel Reservation
Check Flight Reservation
Confirmation
Confirmed
Handle Fault
Problem received

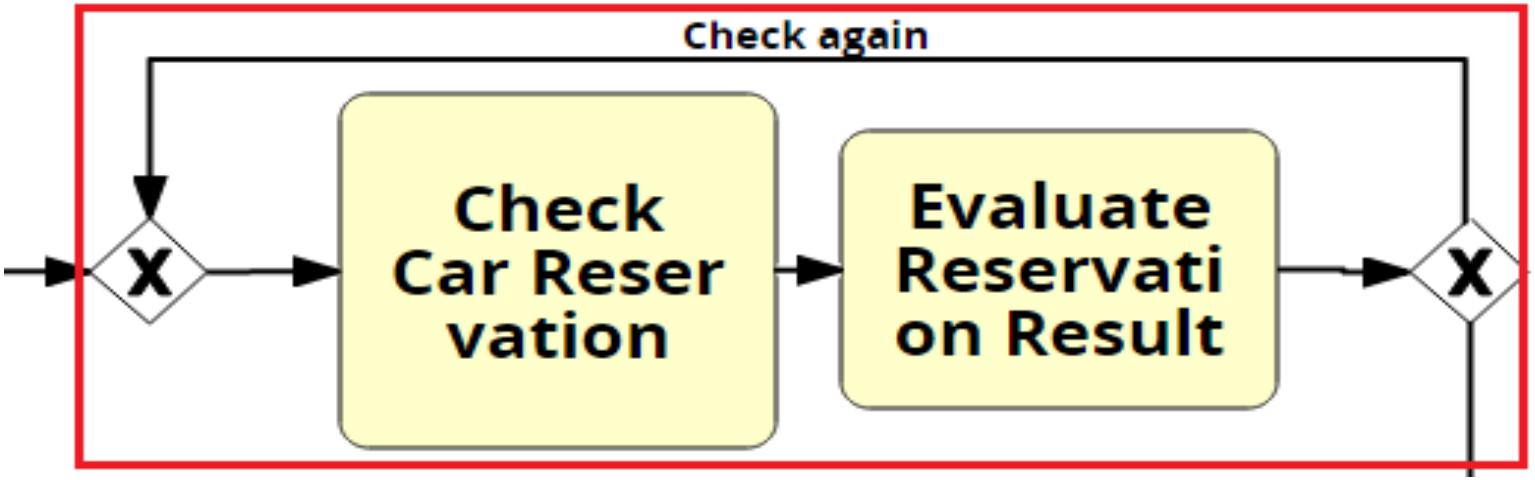


```
<!—Mapping c1-->
<sequence name="">
        <invoke name= "Check Car Reservation"/>
        <invoke name= "Evaluate Reservation Result"/>
        <while condition = "Check again">
                <sequence>
                        <invoke name= "Check Car Reservation"/>
                        <invoke name= "Evaluate Reservation Result"/>
                </sequence>
        </while>
</sequence>
```

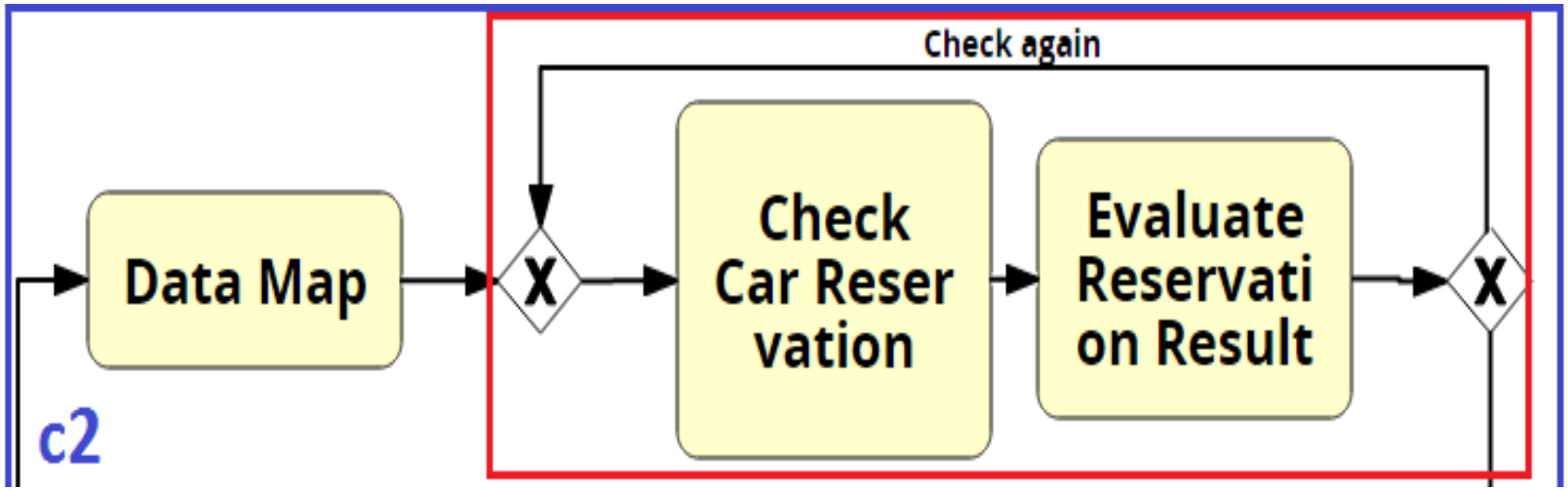

<!—Mapping c2-->

<sequence name="">

<invoke name= “Data Map”/>

Mapping (C1)

</sequence>

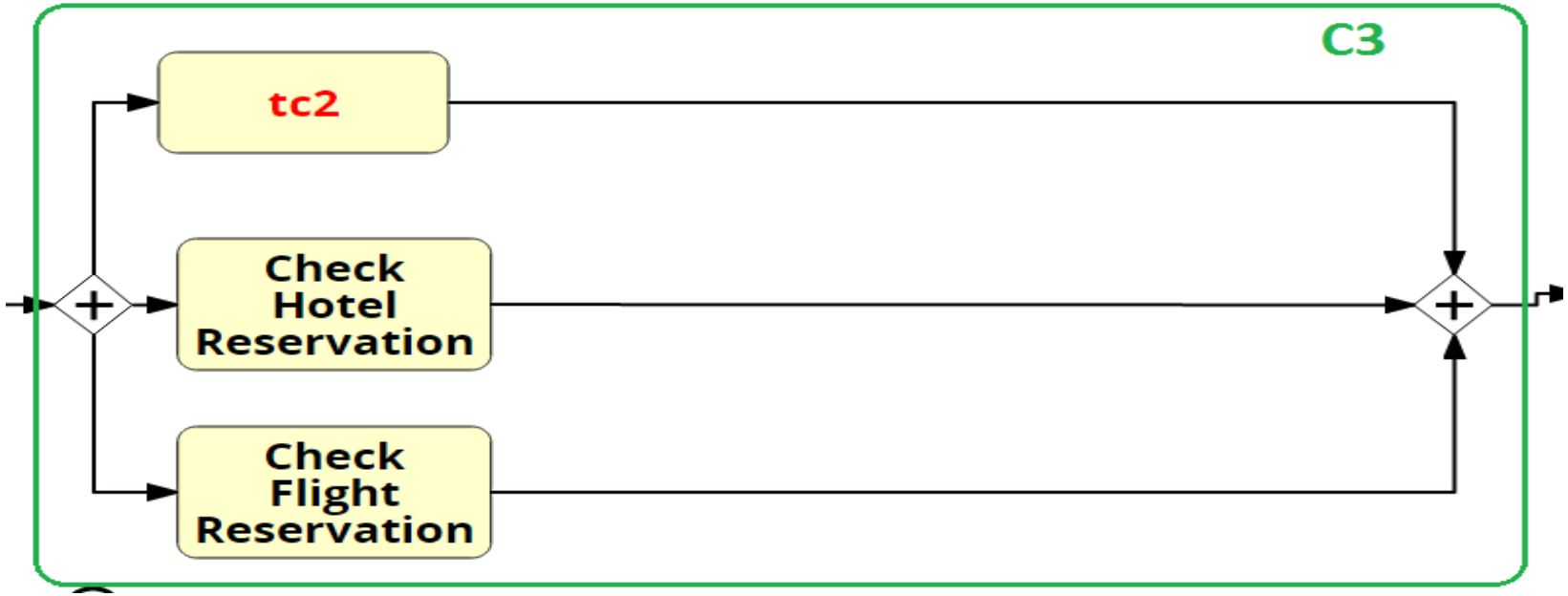

<!—Mapping c3-->

<flow name="">

Mapping (c2)

<invoke name= “Check Hotel Reservation”/>

<invoke name= “Check Flight Reservation”/>

</flow>

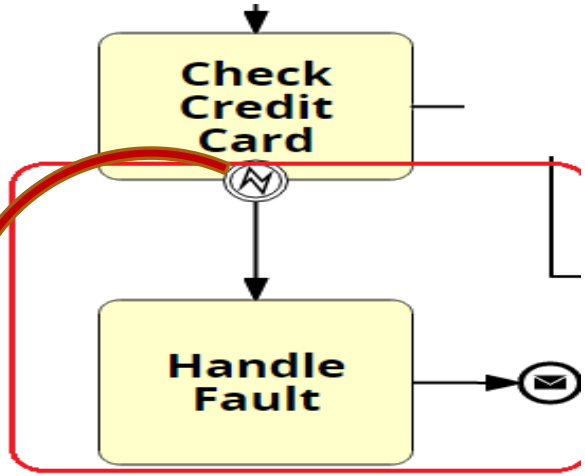


```
<!—Mapping Exception-->
<faultHandlers>
  <catch faultName="exception" faultVariable= "Credit card
    problem">
    <sequence>
      <invoke name= "Handle Fault"/>
      < reply name= "Problem received"/>
    </sequence>
  </catch>
</faultHandlers>
```

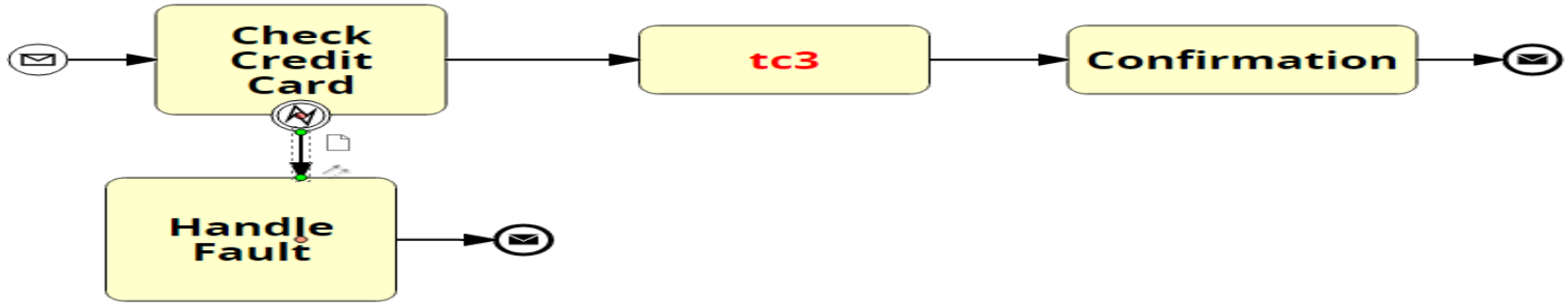

<!—Mapping the rest-->

```
<faultHandlers>…............</ faultHandlers>
    <receive create_instance="yes"/>
    <sequence>
        <invoke name="Check Credit Card"/>
        Mapping (c3)
        <invoke name="Confirmation"/>
        <reply />
    </ sequence
```

```
<process>
<scope name= ”t_c^4”>
<faultHandlers>
<catch faultName= ”exception” name= “Credit card problem”>
<sequence>
<invoke name= “Handle Fault”/>
 <reply name= “Problem received”/>
    </sequence>
</catch>
</faultHandlers>
<receive name= “Received” create_instance="yes"/>
<sequence>
<invoke name="Check Credit Card"/>
<flow name= ”t_c^3”>
    <sequence name=”t_c^2”>
    <invoke name= “Data Map”/>
                <sequence name=”t_c^1”>
    <invoke name= “Check Car Reservation”/>
    <invoke name= “Evaluate Reservation Result”/>
    <while condition = “Check again”>
        <sequence>
    <invoke name= “Check Car Reservation”/>
    <invoke name= “Evaluate Reservation Result”/>
        </sequence>
    </while>
</sequence>
</sequence>
<invoke name= “Check Hotel Reservation”/>
<invoke name= “Check Flight Reservation”/>
</flow>

<invoke name= "Confirmation"/>
<reply name= “Confirmed”/>
</ sequence >
</scope>
</process>
```

<throw ... />

BPMN to BPEL - Example 2

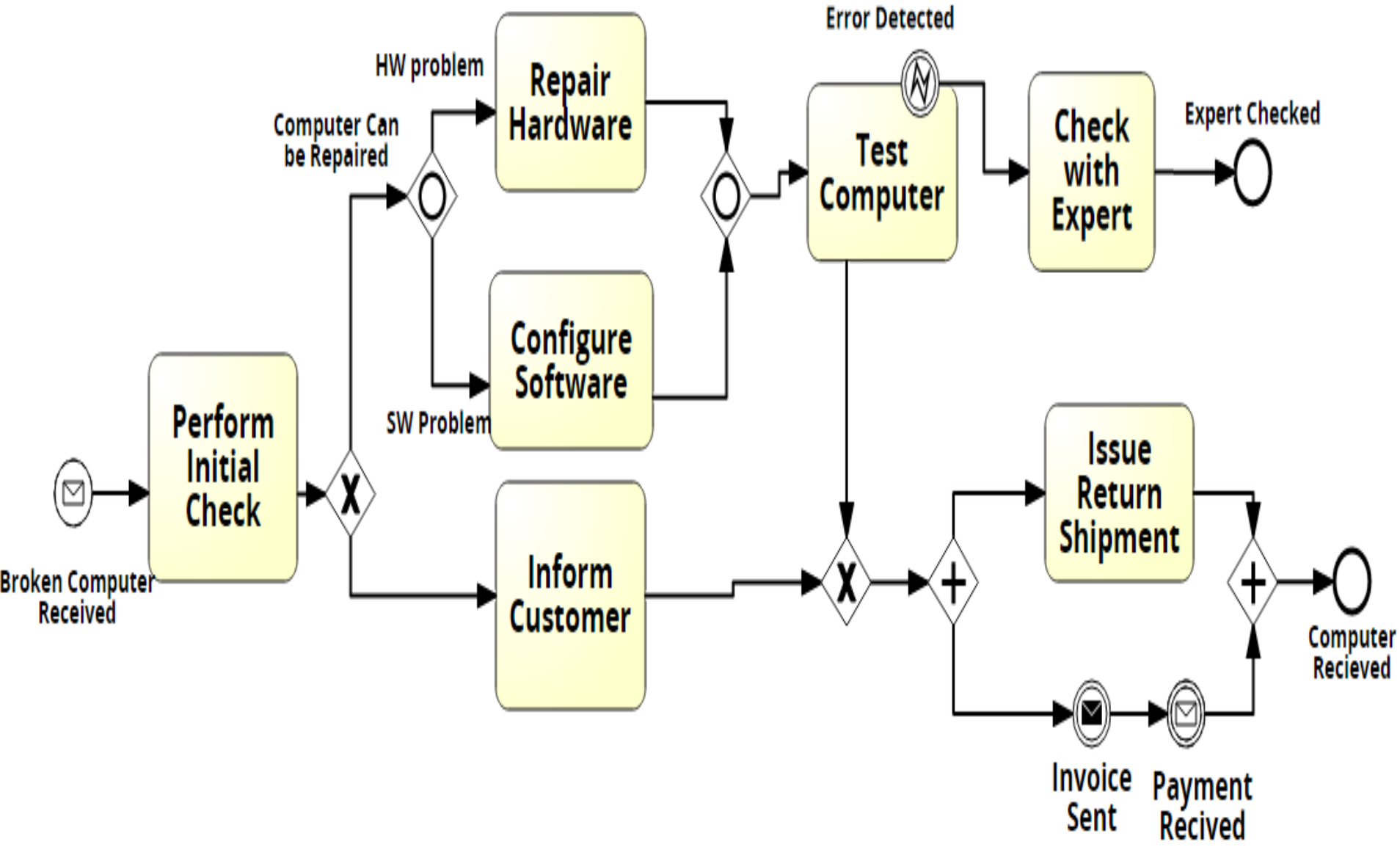
Error Detected
HW problem
Repair Hardware
Computer Can be Repaired
Test Computer
Check with Expert
Expert Checked
Configure Software
SW Problem
Perform Initial Check
Issue Return Shipment
Broken Computer Received
Inform Customer
Computer Recieved
Invoice Sent
Payment Recived

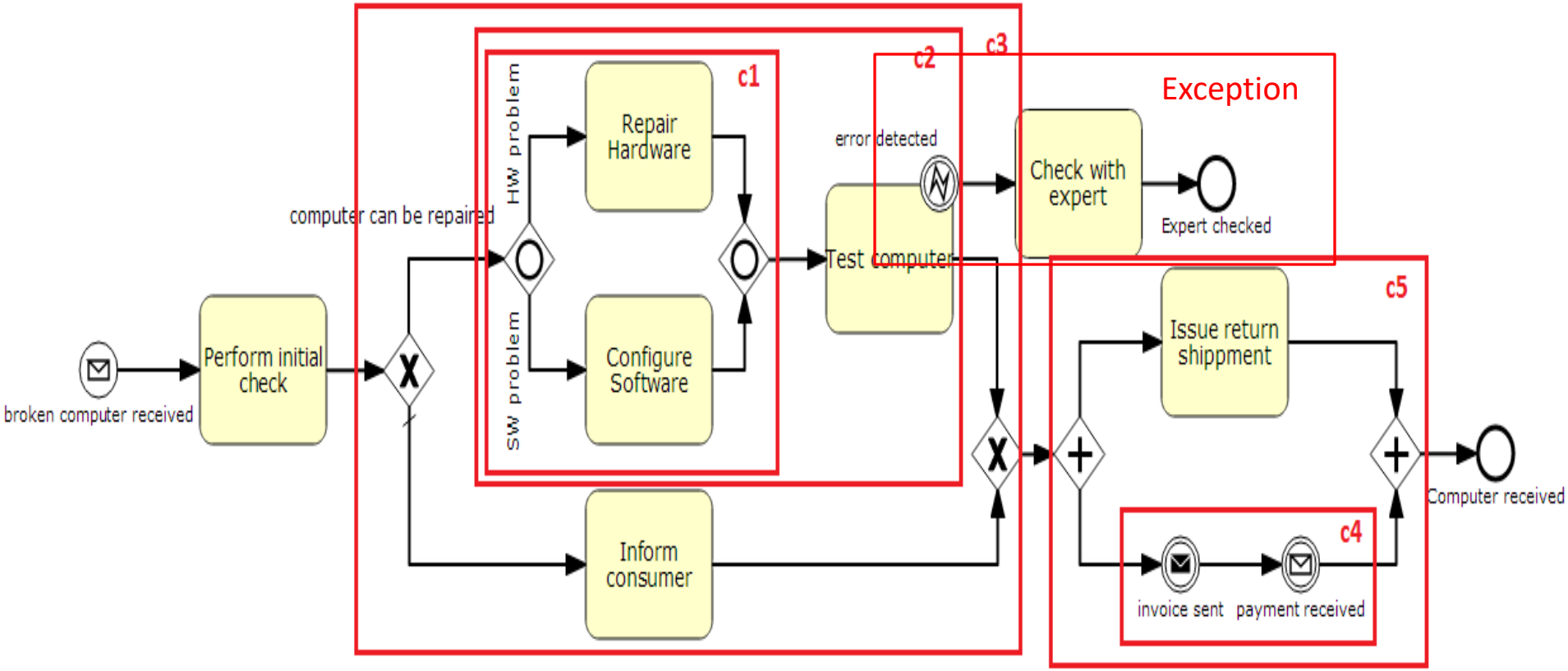
broken computer received
Perform initial check
computer can be repaired
HW problem
SW problem
Repair Hardware
Configure Software
c1
c2
c3
error detected
Test computer
Check with expert
Expert checked
Exception
Inform consumer
c5
Issue return shippment
c4
invoice sent
payment received
Computer received

Mapping c1

Note that this is not the only valid solution

```
<!—Mapping c1-->
<!—Mapping OR gateway to other known gateways for easier mapping to BPEL--!>
<flow>
    <switch>
        <case condition = “HW problem”>
                <invoke name=”Repair hardware”/>
        </case>
        <case condition = “SW problem”>
                <invoke name=”Configure software”/>
        </case>
        <case condition = “HW problem” and “SW problem”>
                <invoke name=”Repair hardware”/>
                <invoke name=”Configure software”/>
        </case>
    </switch>
</flow>
```

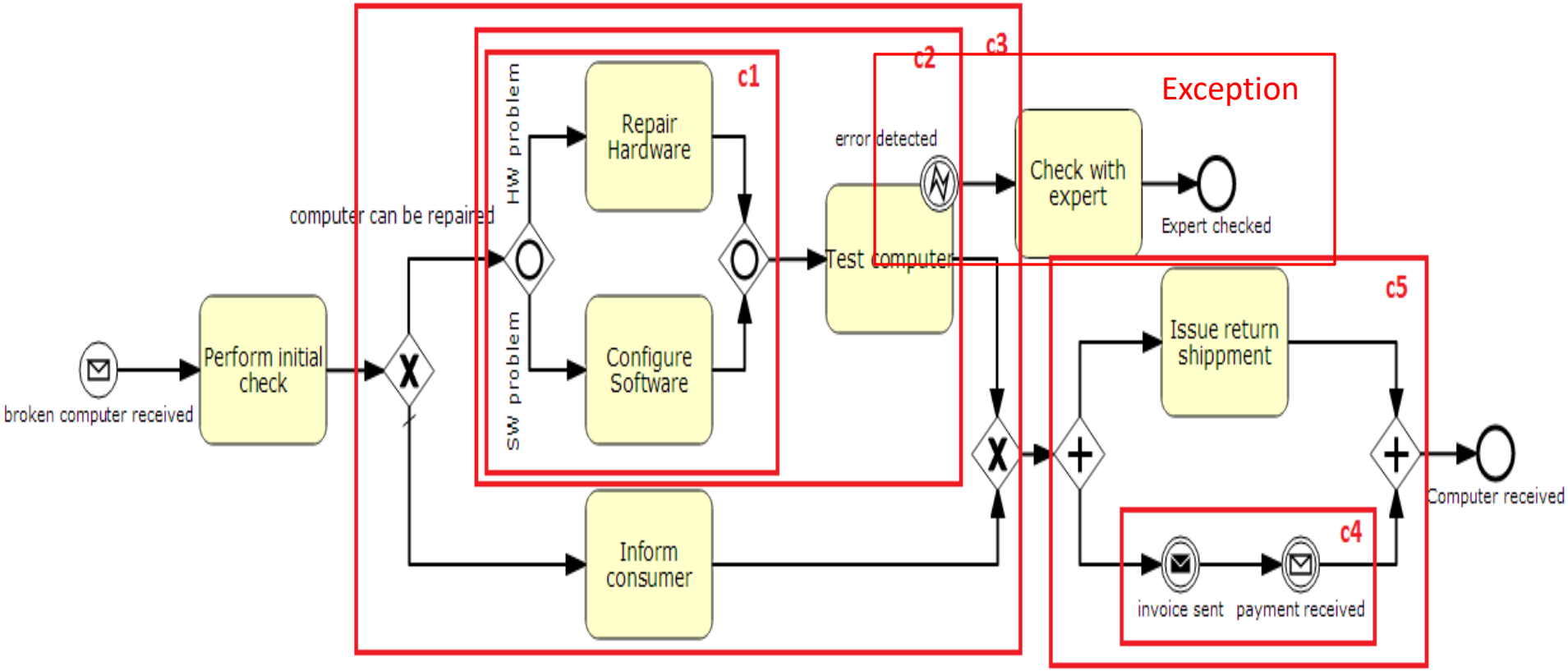
broken computer received
Perform initial check
computer can be repaired
HW problem
SW problem
Repair Hardware
Configure Software
c1
c2
c3
error detected
Test computer
Check with expert
Expert checked
Exception
Inform consumer
c5
Issue return shippment
c4
invoice sent
payment received
Computer received

Mapping Exception

```
<!—Mapping Exception -->

<FaultHandlers>
  <catch faultName= “exception” faultVariable= “error detected”>
    <invoke name= “Check with Expert”/>
    <reply name= “Expert Checked”/>
  </catch>

</FaultHandlers>
```

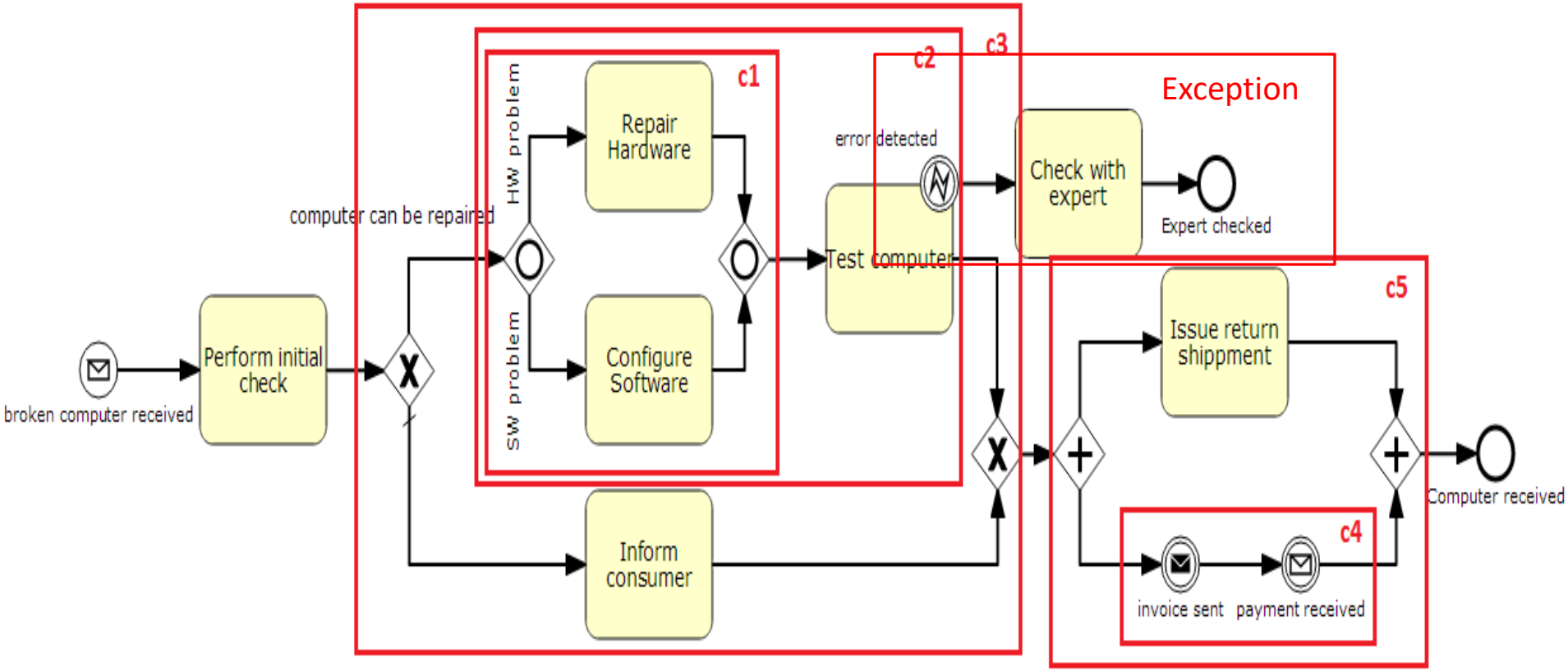
broken computer received
Perform initial check
computer can be repaired
HW problem
SW problem
Repair Hardware
Configure Software
c1
c2
c3
error detected
Test computer
Check with expert
Expert checked
Exception
Inform consumer
c5
Issue return shippment
c4
invoice sent
payment received
Computer received

Mapping c2

<!—Mapping c2-->

(Mapping Exception)

<FaultHandlers>…..</FaultHandlers>

<sequence>

Mapping (c1)

<invoke name="Test Computer"/>

<reply />

</ sequence >

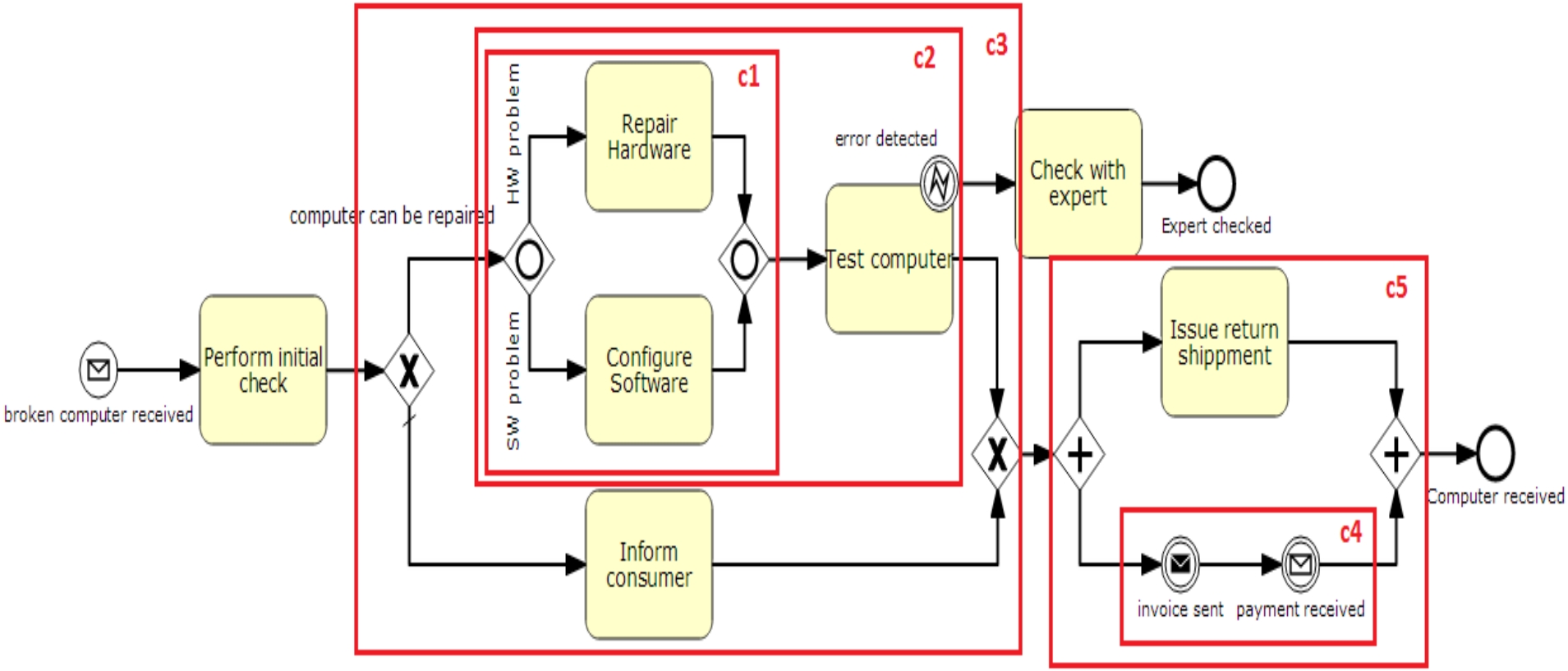
broken computer received
Perform initial check
computer can be repaired
HW problem
SW problem
Repair Hardware
Configure Software
c1
c2
c3
error detected
Test computer
Check with expert
Expert checked
Inform consumer
c5
Issue return shippment
c4
invoice sent
payment received
Computer received

Mapping c3 ommited the <flow>

```
<switch>
        <case condition = “computer can be repaired”>
                Mapping(c2)
        </case>
        <otherwise>
                <invoke name= “Inform customer”/>
        </otherwise >
</switch>
```

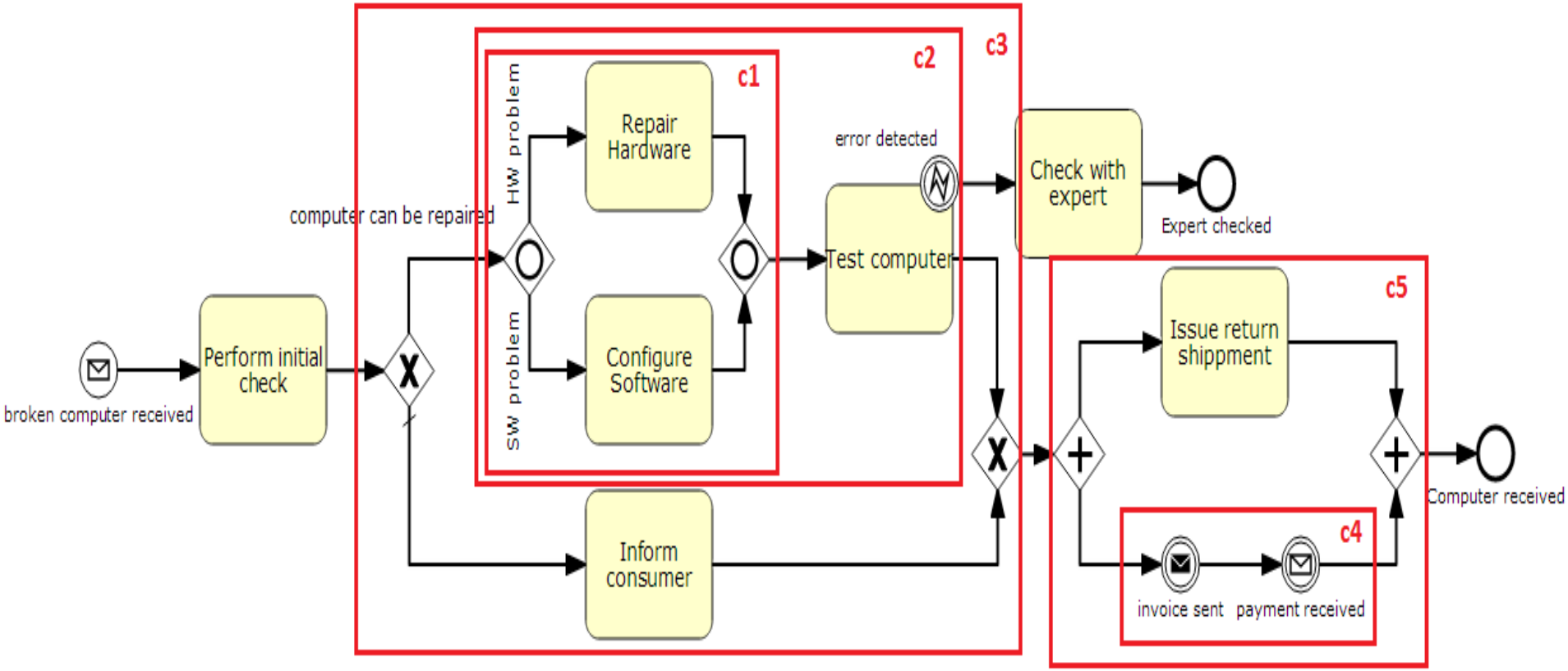
broken computer received
Perform initial check
computer can be repaired
HW problem
SW problem
Repair Hardware
Configure Software
c1
c2
c3
error detected
Test computer
Check with expert
Expert checked
Inform consumer
c5
Issue return shippment
c4
invoice sent
payment received
Computer received

Mapping c4

```
<sequence>
   <reply  name= “Invoice Sent”/>
   <receive name= “Payment received”/>
</sequence>
```

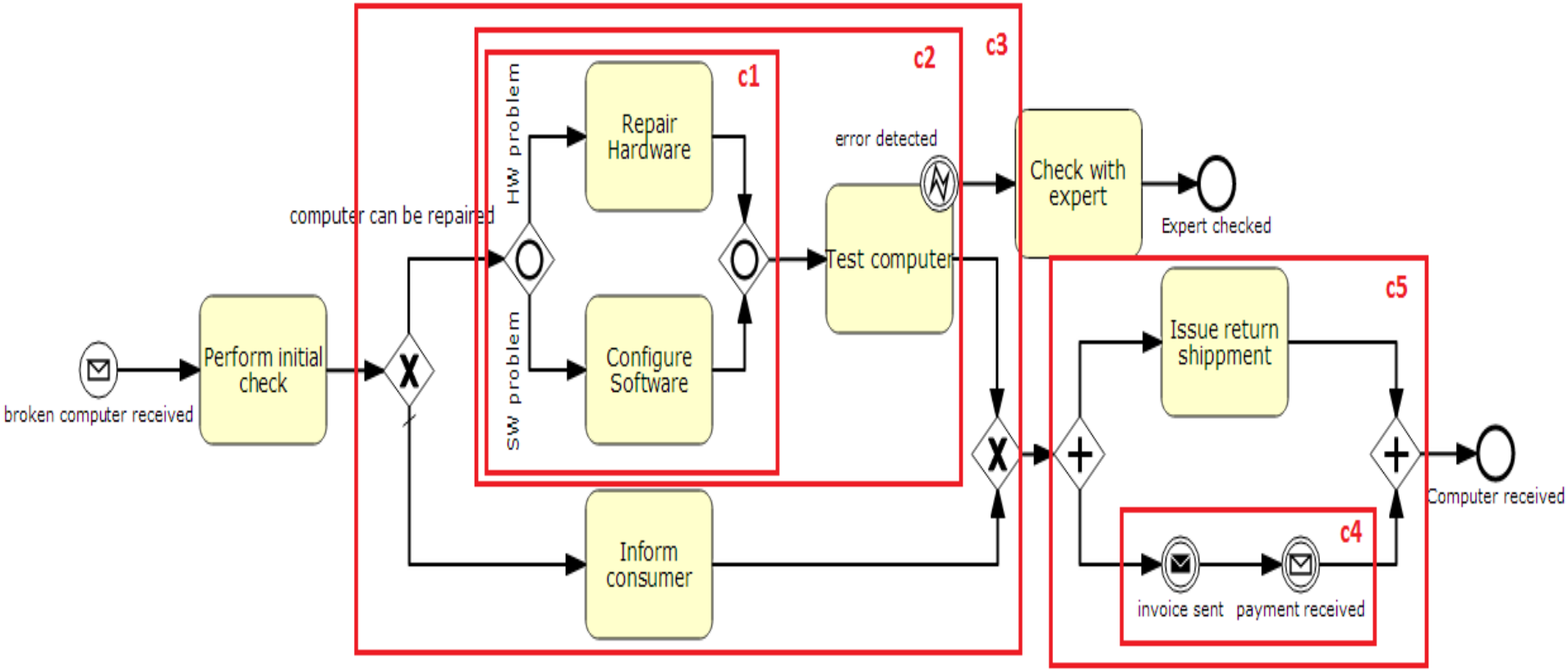
broken computer received
Perform initial check
computer can be repaired
HW problem
SW problem
Repair Hardware
Configure Software
c1
c2
c3
error detected
Test computer
Check with expert
Expert checked
Inform consumer
c5
Issue return shippment
c4
invoice sent
payment received
Computer received

Mapping c5

<flow>

<invoke name= “Issue return shipment”/>

Mapping (c4)

</flow>

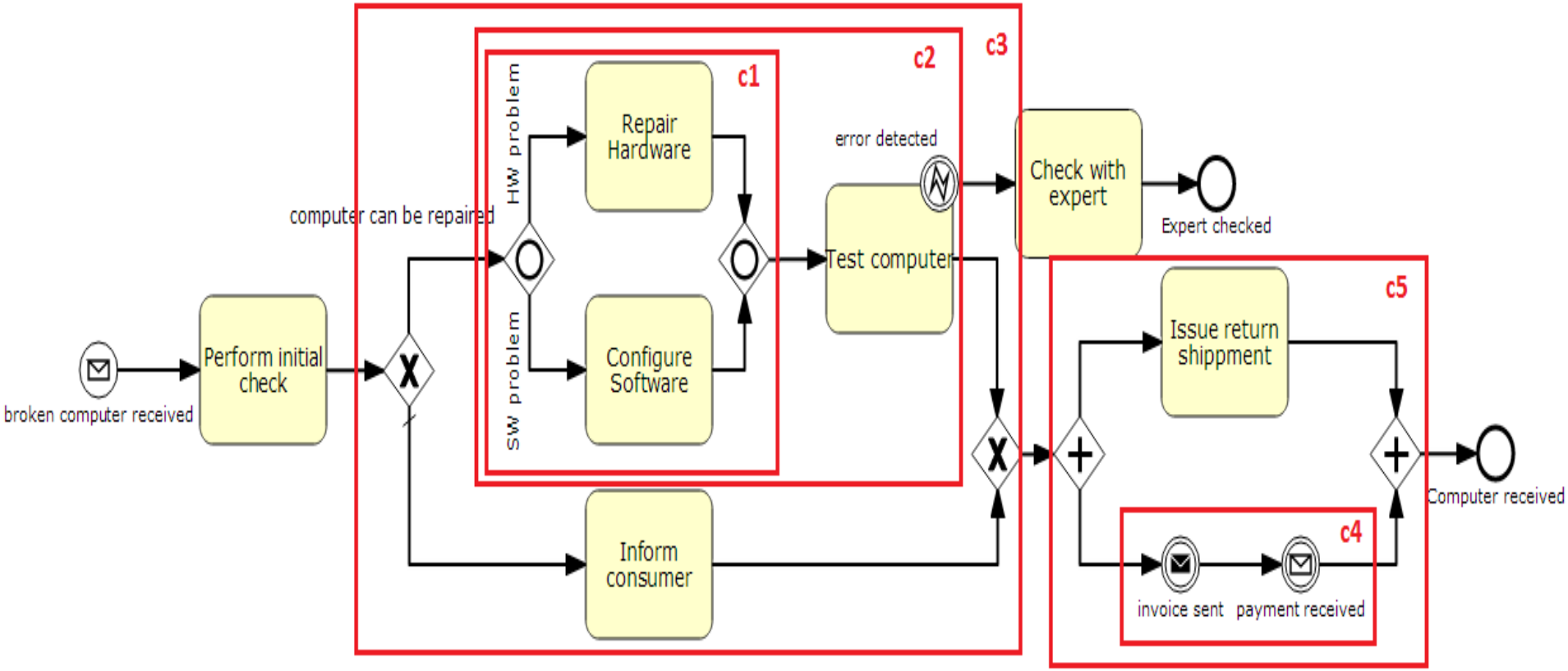
broken computer received
Perform initial check
computer can be repaired
HW problem
SW problem
Repair Hardware
Configure Software
c1
c2
c3
error detected
Test computer
Check with expert
Expert checked
Inform consumer
c5
Issue return shippment
c4
invoice sent
payment received
Computer received

Mapping process

<**sequence**>

  <**receive** name=”Broken Computer Received”/>

  <**invoke** name=”Perform Initial Check”>

  Mapping (c3)

  Mapping (c5)

</sequence>

```
<process>
<FaultHandlers>
<catch faultName= "exception" faultVariable= "error detected">
 <invoke name= "Check with Expert"/>
<reply name= "Expert Checked"/>
</catch>
    </FaultHandlers>
<sequence>
<receive name= "Broken Computer Received"/>
<invoke name= "Perform Initial Check">
<flow>
    <switch>
    <case condition = "computer can be repaired">
        <sequence>
<flow>
<case condition = "HW problem">
<invoke name= "Repair hardware"/>
</case>
<case condition = "SW problem">
<invoke name= "Configure software"/>
</case>
<case condition = "HW problem" and "SW problem">
<invoke name= "Repair hardware"/>
<invoke name= "Configure software"/>
</case>
</flow>
```

```
<invoke name="Test Computer"/>
<throw faultVariable= “error detected”/>
</ sequence >
    </case>
    <otherwise>
        <invoke name= “Inform customer”/>
    </otherwise >
    </switch>
</flow>
<flow>
<invoke name= “Issue return shipment”/>
<sequence>
    <reply  name= “Invoice Sent”/>
<receive name= “Payment received”/>
</sequence>
</flow>   <reply name="computer shipped out"/>
</sequence>
</process>
```

Any Questions